Design and Implementation of a Secure Digital In-Memory Computing Core

Ajay Sabareesh Balamurugan and Kaiyuan Yang

Department of Electrical and Computer Engineering
Rice University, Houston, TX

***Abstract*—AI models deployed on the edge are increasingly vulnerable to side-channel attacks (SCA), which exploit power leakages to compromise the parameters of proprietary AI models. This leads to the loss of intellectual property and makes the deployment of cutting-edge models at the edge risky. Current state-of-the-art implementations address these vulnerabilities using physical measures such as switched capacitors and masking schemes that have a high area overhead of about 12×–13×. Our solution aims to reduce this overhead and improve robustness by implementing a Threshold Implementation (TI) based Digital In-Memory Computing (DIMC) core for neural network inference. By leveraging 3-share Boolean masking and XNOR-based multipliers, we aim to reduce the need for hybrid components and complex PRNG routing. We believe that this approach will lead to a reduction in area overhead to about 2×, which is a 60% improvement in area efficiency over current baseline designs.**

***Index Terms*—Digital In-Memory Computing (DIMC), Side-Channel Attacks (SCA), Hardware Security, Boolean Masking, Edge AI, Threshold Implementation (TI).**

I. Introduction

THE rapid deployment of Artificial Intelligence (AI) at the edge has fundamentally shifted the computing landscape, bringing real-time inference to mobile devices, IoT sensors, and autonomous systems. However, traditional Von Neumann architectures suffer from the ”memory wall” bottleneck. In these systems, the continuous movement of data between memory and processing units consumes significantly more energy than the computation itself, severely limiting efficiency. Digital In-Memory Computing (DIMC) has emerged as a compelling solution by embedding arithmetic operations directly within or near memory arrays, thereby minimizing data movement and enabling high-throughput, energy-efficient neural network acceleration. Furthermore, the massively parallel activation patterns inherent to DIMC architectures introduce unique data-dependent switching behaviors, which, while beneficial for performance, inadvertently amplify observable physical leakages.

Despite these performance gains, edge AI devices operate in physically exposed and often adversarial environments, making them highly vulnerable to hardware-based exploits. Among these, Side-Channel Attacks (SCA) pose a critical threat by exploiting unintentional leakages such as power consumption, electromagnetic emissions, and timing variations to infer sensitive information. Power analysis attacks, including Differential Power Analysis (DPA) and Correlation Power Analysis (CPA), are particularly effective against DIMC systems, where simultaneous activation of multiple memory rows produces highly correlated and distinguishable power signatures. Such vulnerabilities can enable adversaries to extract proprietary model parameters, compromising both intellectual property and system integrity.

Securing these systems remains a significant challenge, as existing countermeasures typically fall into two distinct categories, each with inherent limitations. Physical security techniques, such as switched-capacitor-based designs, rely heavily on precise analog behavior. However, ensuring consistent leakage suppression across process, voltage, and temperature variations is extremely challenging, making these approaches fragile in practice. On the other hand, algorithmic techniques like Boolean masking provide formal security guarantees by decorrelating intermediate computations from sensitive data. Yet, implementing secure masked operations—particularly non-linear functions—introduces substantial hardware overhead, often inflating the core area by an order of magnitude compared to unprotected designs.

These limitations highlight the need for a fundamentally different design paradigm. A hybrid approach that strategically integrates lightweight physical protections with selective masking can balance the trade-offs between robustness and efficiency. By leveraging physical techniques to suppress dominant leakage sources and reserving masking for critical non-linear operations, it is possible to significantly reduce both analog sensitivity and area overhead. Such a co-designed methodology enables the development of secure, scalable DIMC architectures that meet the stringent performance, energy, and security requirements of next-generation edge AI systems.

While recent works have explored secure DIMC architectures and masking-based accelerators, they often treat physical and algorithmic countermeasures in isolation, leading to suboptimal trade-offs in either robustness or efficiency [1], [4]. Additionally, existing pre-silicon evaluation methodologies highlight that leakage behavior is highly design-dependent and often manifests at specific nodes and switching events rather than uniformly across the datapath [8], [9], [10], [11]. This observation suggests that uniform, full-scale protection mechanisms may be unnecessarily pessimistic and inefficient for practical implementations.

Motivated by these insights, this work adopts a co-design perspective, where security is treated as a localized and context-aware property rather than a globally enforced constraint. By identifying and targeting the dominant sources of leakage within the DIMC datapath, we aim to minimize

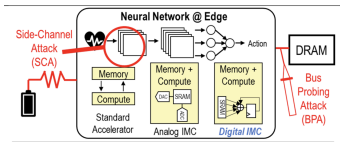

Fig. 1: Threat landscape for Neural Networks at the Edge, illustrating non-invasive Side-Channel Attacks (SCA) leveraging physical power signatures and semi-invasive Bus Probing Attacks (BPA) targeting external memory interfaces.

redundant protection overhead while preserving strong first-order security guarantees. This approach not only bridges the gap between physical and algorithmic techniques but also aligns with the stringent area and energy constraints of edge AI hardware.

To the best of our knowledge, this is the first DIMC architecture that explicitly leverages datapath-aware hybrid security to achieve both scalable masking compatibility and practical area efficiency.

II. Methodology

A. Threat Model and Security Assumptions

In alignment with standard hardware security evaluations, we assume a powerful adversary with local, physical access to the edge device. The attacker is capable of performing non-invasive Side-Channel Attacks (SCA), specifically monitoring the dynamic power consumption and electromagnetic (EM) emissions during neural network inference. Furthermore, we assume the adversary operates under Kerckhoffs's principle, possessing full knowledge of the implemented neural network architecture, masking algorithms, and the underlying DIMC hardware logic, lacking only the proprietary model weights. The primary objective of this architecture is to provide provable resistance against first-order attacks and ensure Probe-Isolating Non-Interference (PINI) for the internal datapath, strictly limiting any internal probe leakage to a single share index.

To achieve a balance between robust Side-Channel Attack (SCA) resistance and the area constraints of edge devices, this work proposes a hybrid security architecture, as illustrated in Fig. 5. The methodology centers on the principle that mathematical linearity is domain-dependent, allowing for the strategic partitioning of operations between algorithmic masking and physical countermeasures.

B. Masking Domains and Linearity Constraints

Hardware masking relies on splitting a sensitive variable x into independent shares to decorrelate the power consumption from the underlying data. We distinguish between two primary masking domains utilized in this architecture:

1) **Boolean Masking:** A variable x is represented by n shares (where $n = 3$ for this implementation) such that:

$$x = x_1 \oplus x_2 \oplus x_3 \tag{1}$$

This domain is highly efficient for bitwise XOR operations but incurs significant overhead for arithmetic operations.

2) **Additive (Arithmetic) Masking:** A variable x is represented as:

$$x = (A + B + \ldots) \pmod{2^k} \tag{2}$$

While addition is linear in this domain, bitwise logic becomes non-linear and area-prohibitive.

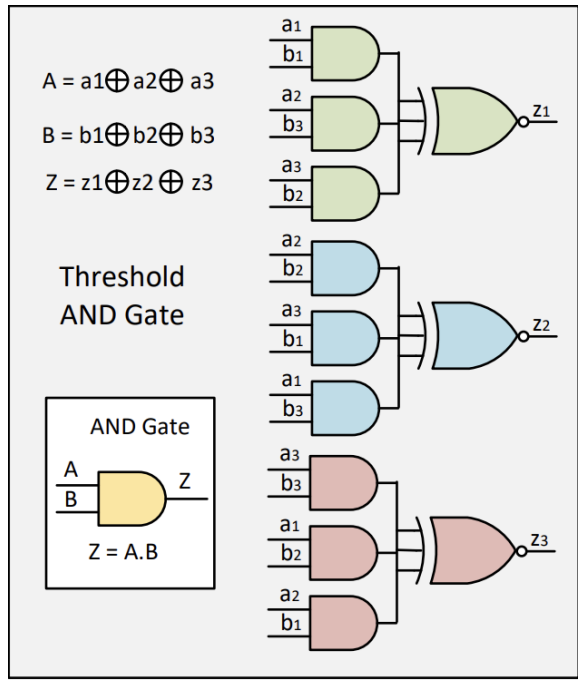

Fig. 2: Logic expansion of a single AND gate using a 3-share Threshold Implementation (TI). The requirement to compute nine distinct cross-products significantly increases the logic depth and area overhead compared to the unprotected baseline.

The fundamental challenge in secure DIMC design is that standard **AND**-based multiplication is non-linear relative to the Boolean domain defined in (1). As illustrated in Fig. 2, protecting a single non-linear AND operation requires evaluating nine distinct cross-product terms to maintain the non-completeness property. Implementing these complex non-linear gadgets directly in hardware leads to a massive bloat in area overhead—often resulting in a core $12\times$ to $13\times$ the size of an unprotected baseline.

C. Linearized IMC Multiplication via XNOR

To alleviate the non-linearity tax, our methodology utilizes **XNOR-based bitwise multiplication** within the IMC macro (labeled as the DIMC Array in Fig. 5). By restructuring the multiplication to be linear in the Boolean domain, we ensure that partial products can be computed and processed through a 3-share masked **Tree Adder** without inter-share communication. This approach satisfies the *Non-completeness* property of Threshold Implementation (TI), preventing leakage even in the presence of hardware glitches, while significantly reducing the logic depth and area footprint compared to masked AND-gates. To compensate for the functional divergence from traditional arithmetic, an algorithmic offset correction is integrated into the near-memory post-processing unit.

This refinement ensures the final results are mathematically equivalent to standard AND-based multiplication, maintaining inference accuracy while preserving the security benefits of the linearized datapath.

D. Near-Memory Post-Computation Partitioning

While the high-parallelism MAC operations are performed within the IMC macro, the non-linear layers—specifically **Batch Normalization**, **ReLU** and the **Multiplier Offset Correction** —are executed as post-computation in the Near-Memory Computing (NMC) unit. By partitioning the architecture this way, we avoid the prohibitive cost of implementing non-linear Boolean masking for the entire pipeline. To further mitigate the area bloat inherent in multi-share masking schemes, the NMC unit is architected to reuse the same hardware logic for both final multi-bit accumulation and Batch Normalization. This is achieved by pre-calculating the Batch Normalization layers into known coefficients, allowing the operation to be implemented as a simplified shift-and-add sequence rather than requiring complex, area-prohibitive multiplication and addition units.

We aim to secure these specific near-memory bottlenecks using physical security measures, such as switched-capacitor logic, to decouple the digital switching activity from the V_{DD} supply. This hybrid strategy of hardware reuse and localized physical countermeasures allows the system to support a full neural network inference flow while targeting an aggregate area overhead of only $5\times$ compared to the unprotected baseline.

E. Side-Channel Evaluation Methodology

To rigorously evaluate the security of the proposed DIMC core, we implemented an automated Side-Channel Analysis (SCA) verification flow. The evaluation methodology is based on the Test Vector Leakage Assessment (TVLA) using Welch's T-test, which provides a statistical measure of whether the device's power consumption is independent of the processed data.

We utilize a "Fixed vs. Random" testing protocol, where the hardware is subjected to 60,000 trials. The power consumption traces are extracted via post-synthesis gate-level simulations using Synopsys PrimeTime PX to capture the dynamic switching activity at a 10ps resolution. The T-statistic is calculated at each time point according to equation 3.

$$t = \frac{\mu_{fixed} - \mu_{random}}{\sqrt{\frac{s^2_{fixed}}{N_{fixed}} + \frac{s^2_{random}}{N_{random}}}} \tag{3}$$

Where μ_{fixed} and μ_{random} represent the mean power consumption of the fixed and random data sets, respectively; s denotes the standard deviation; and N represents the number of trials ($N = 30,000$ per set). A T-statistic exceeding the threshold of $|t| > 4.5$ is defined as a failure, indicating a statistically significant leakage of sensitive information.

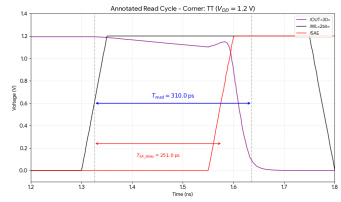

Fig. 3: Write Cycle graph of the memory array simulated with post layout load

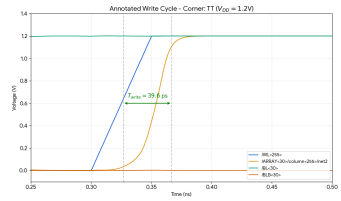

Fig. 4: Read Cycle graph of the memory array simulated with post layout load

F. Memory Array Integration

A 6 transistor based SRAM memory array was also designed with a targeted 1GHz operating frequency using the same TSMC 28nm technology node. The read and write cycle performances of the are illustrated in 4 and 3 respectively. The critical path read cycle delay is measured from the decoder output to the SRAM and lastly the sense amplifier. The read cycle delay of the memory array is 310ps and the write cycle delay is 39.6ps in the TT corner.

The entire memory array circuitry including the peripherals were tested across all process and temperature variation corners and was validated to operate at a frequency of 1GHz even for SS corner conforming to the original frequency target.

III. Preliminary Results

As this work represents an ongoing development effort, the results presented herein reflect the functional verification and initial hardware synthesis of the core architectural components prior to full-system integration.

A. Algorithm-Level Verification

The mathematical viability of the hybrid masking approach was validated through high-level software modeling. Specifically, the **XNOR offset correction** methodology was implemented and tested via a Python-based verification script. Simulations confirm that the statistical offsets introduced by substituting standard AND-based multipliers with linear XNOR logic can be fully compensated during the near-memory Batch Normalization phase, ensuring the inference accuracy is not degraded. The AND based multiplication results can be obtained from the XNOR based results as shown in equation 4.

$$X_{AND} = \frac{X_{NOR} - Offset}{2} \tag{4}$$

Where the statistical offset for an N-input accumulation is derived from the summation of the input activations (A) and weights (W) shown in equation 5.

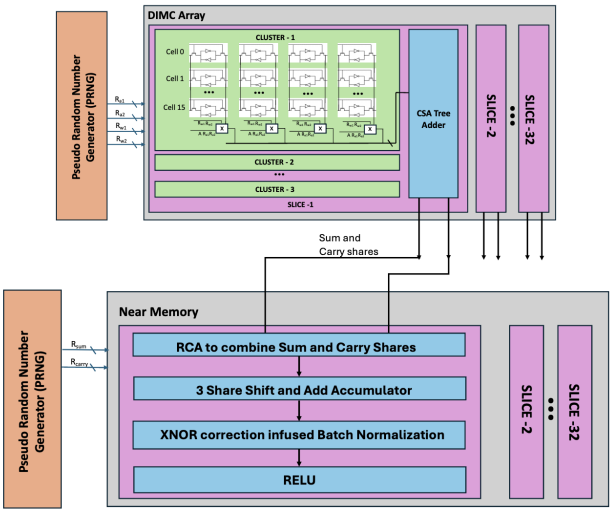

Fig. 5: Architecture of the secure DIMC core featuring 3-share Boolean masking, CSA tree integration, and XNOR-correction infused Batch Normalization.

$$Offset = N - \left(\sum_{i=1}^{N} A_i + \sum_{i=1}^{N} W_i \right) \tag{5}$$

This methodology ensures that the DIMC array remains purely linear for Boolean masking while allowing the PPU to reconstruct the non-linear MAC results required for downstream layers such as Batch Normalization and ReLU

B. Area Analysis and Logic Overhead

Synthesis results for the Carry Save Adder (CSA) tree variants, targeting the TSMC 28nm HPC+ process node, are summarized in Table I.

The 3-share Boolean masking implementation utilizes 4,084 combinational cells, resulting in a total area of 3,063.56 μm^2. In contrast, the optimized Hybrid 2-share variant achieves a significant reduction in physical footprint, occupying only 935.00 μm^2. While the Hybrid design offers superior area efficiency, the subsequent side-channel analysis reveals a critical security-performance trade-off.

As detailed in Table I, the initial synthesis was targeted to a **TSMC 28nm HPC+** process node. The synthesis report confirms that the CSA tree is purely combinational, requiring 4,176 standard cells and occupying a total cell area of 3,063.56 $\mu\mathrm{m}^2$. This preliminary area extraction establishes the physical baseline for the masked IMC logic, verifying that the linear partial-product summation does not trigger the exponential gate explosion characteristic of masked AND-operations.

C. Side-Channel Evaluation

The empirical security of the proposed DIMC core was evaluated using an automated Side-Channel Analysis (SCA) verification flow. This methodology is centered on the Test Vector Leakage Assessment (TVLA) using Welch's T-test, which provides a statistical measure of whether the device's power consumption is independent of the processed data. We utilized a "Fixed vs. Random" testing protocol where the hardware was subjected to 60,000 trials to ensure statistical significance beyond preliminary noise floors. The power consumption traces were extracted via post-synthesis gate-level simulations using Synopsys PrimeTime PX to capture dynamic switching activity at a 10ps resolution. The T-statistic was calculated at each time point to determine if the magnitude $|t|$ exceeded the standard security threshold of 4.5.

TABLE I: Comparative Synthesis Results: Hybrid 2-Share vs. 3-Share CSA Tree

Parameter	Hybrid 2-Share CSA	3-Share CSA
Technology Node	TSMC 28nm HPC+	TSMC 28nm HPC+
Combinational Cells	1,602	4,084
Buffer/Inverter Cells	338	324
Total Cell Area	**935.00** $\mu\mathrm{m}^2$	**3063.56** $\mu\mathrm{m}^2$

The results of this 60,000-trial gauntlet, conducted on the design variants synthesized in TSMC 28nm HPC+, are illustrated in Fig. 6. The evaluation of the Hybrid 2-share baseline revealed a significant T-statistic failure, reaching a magnitude of $|t| \approx 10$ at the 5ns timestamp as shown in Fig. 6(a). This is starkly contrasted by the performance of the 3-share Boolean masking implementation, which successfully maintained a robust security floor with $|t| < 3$ throughout the entire 20ns clock period (Fig. 6(b)). Furthermore, the mean power signature overlay in Fig. 6(c) demonstrates near-perfect alignment between the Fixed and Random data sets. This symmetry confirms that the 3-share architecture effectively decorrelates internal switching activity to prevent first-order leakage, satisfying the requirements for secure edge AI deployment.

IV. Discussion and Ongoing Work

The preliminary synthesis of the Carry Save Adder (CSA) tree validates the primary hypothesis of this architecture: linearizing In-Memory Computing (IMC) arithmetic via XNOR-based logic successfully bypasses the exponential area bloat characteristic of traditional masked multipliers. However, evaluating these results from a physical layout perspective reveals a critical architectural constraint regarding the integration of Boolean masking. Extending a pure 3-share scheme throughout the entire multi-bit accumulation phase would introduce severe pitch-matching complications with the memory array columns, potentially compromising macro density. Consequently, a strict architectural boundary must be maintained, where Boolean partial-product generation is prioritized for its high efficiency.

The empirical results from the 60,000-trial TVLA gauntlet further reinforce the necessity of this design partitioning. While the Hybrid 2-share variant offers a minimized physical footprint, its failure at the 5ns clock edge confirms that first-order masking alone is insufficient to suppress data-dependent glitches and physical imbalances at the 28nm node. By contrast, the 3-share implementation satisfies the Non-completeness property of Threshold Implementations (TI), ensuring the secret state remains statistically hidden even at

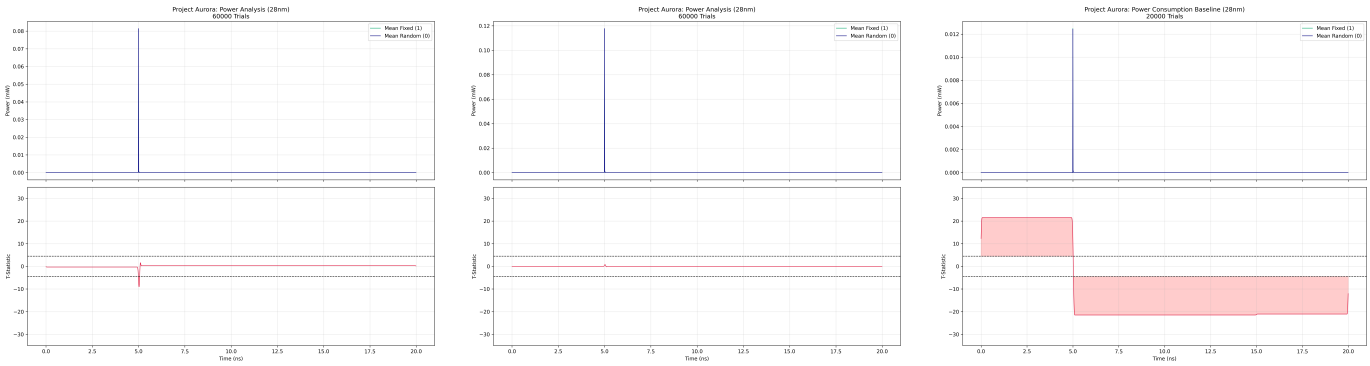

(a) Hybrid 2-Share ($|T| \approx 10$) (b) 3-Share Robustness ($|T| < 3$) (c) Mean Power Signature Overlay

Fig. 6: Empirical Side-Channel Analysis for Project Aurora at 28nm. (a) Significant first-order leakage identified at the 5ns clock edge in the Hybrid implementation. (b) Successful suppression of data-dependent power signatures using 3-share Boolean masking at 60,000 trials. (c) Comparison of the mean power signatures for Fixed vs. Random trial sets.

high sample counts. Although this implementation utilizes 4,084 combinational cells, the aggregate area overhead of approximately $4\times$ remains well below the initial $5\times$ target projected for the secure core.

Moving forward, the research will transition from global logic verification to localized physical optimization. The immediate roadmap for the Summer 2026 term involves a three-tier development phase focused on node-level leakage isolation, surgical physical security, and RTL integration. First, we will advance the automated verification flow to perform net-level power analysis using PrimeTime PX to identify the precise gates within the carry-propagation chain responsible for the 5ns leakage. Second, rather than utilizing globally redundant masking logic, we will apply "surgical" patches to the identified leaky nodes. This includes implementing targeted physical countermeasures—such as signal shielding and capacitive decoupling within the 28nm layout—to further optimize the area-security Pareto front.

Finally, the Near-Memory Post-Processing Unit is currently being developed at the RTL level to integrate multi-bit accumulation, algorithmic XNOR offset correction, and Batch Normalization into a single pipeline. To maintain the strict area budget, the security of this unit will rely on physical hardware countermeasures, such as switched-capacitor logic, to decouple digital switching activity from the primary V_{DD} supply The ultimate objective is to execute standardized workloads, such as CIFAR-10, through comprehensive Correlation Power Analysis (CPA) simulations to empirically demonstrate the core's robust resistance to side-channel attacks while maintaining the high efficiency required for next-generation edge AI deployment.

Acknowledgment

The authors would like to thank Professor Kaiyuan Yang and the Secure and Intelligent Micro-Systems (SIMS) Lab, as well as the Department of Electrical and Computer Engineering at Rice University, for their ongoing guidance and support.

CRediT Author Statement

Ajay Sabareesh Balamurugan: Conceptualization, Methodology, Software, Hardware, Validation, Formal Analysis, Investigation, Writing - Original Draft, Writing - Review & Editing.

References

[1] M. Ashok, S. Maji, X. Zhang, J. Cohn, and A. P. Chandrakasan, "A Secure Digital In-Memory Compute (IMC) Macro with Protections for Side-Channel and Bus Probing Attacks," in *Proc. IEEE CICC*, 2024, pp. 1–2.

[2] T. Schneider, A. Moradi, and T. Güneysu, "Arithmetic Addition over Boolean Masking," in *Proc. ACNS*, Springer, 2015.

[3] D. Wang *et al.*, "DIMC: 2219TOPS/W 2569F^2/b digital in-memory computing macro in 28nm based on approximate arithmetic hardware," in *Proc. IEEE ISSCC*, 2022.

[4] S. Maji *et al.*, "A threshold implementation-based neural network accelerator with power and electromagnetic side-channel countermeasures," *IEEE J. Solid-State Circuits*, vol. 58, no. 1, pp. 141–154, 2022.

[5] L. Goubin, "A sound method for switching between boolean and arithmetic masking," in *Proc. CHES*, Springer, 2001.

[6] P. Sasdrich, B. Bilgin, M. Hutter, and M. E. Marson, "Low-latency hardware masking with application to AES," *IACR Trans. Cryptogr. Hardw. Embed. Syst.*, vol. 2020, no. 2, pp. 300–326, 2020.

[7] S. V. D. Kumar *et al.*, "Low-cost first-order secure Boolean masking in glitchy hardware," in *Proc. DATE*, 2023.

[8] M. K. Bepary *et al.*, "Prescan: A comprehensive review of pre-silicon physical side-channel vulnerability assessment methodologies," *Chips*, vol. 3, no. 4, pp. 311–333, 2024.

[9] J. Van Woudenberg *et al.*, "Pre-silicon side channel and fault analysis," in *Proc. IEEE/ACM DAC*, 2023.

[10] N. Pundir, N. Selvakkumaran, A. S. Sadi, and F. Farahmandi, "Power side-channel leakage assessment framework at register-transfer level," *IEEE Trans. Very Large Scale Integr. (VLSI) Syst.*, vol. 30, no. 9, pp. 1207–1218, 2022.

[11] V. S. Bokharaie and A. Jahanian, "Power side-channel leakage assessment and locating the exact sources of leakage at the early stages of ASIC design process," *J. Supercomput.*, vol. 78, no. 2, pp. 2219–2244, 2022.